SIEMENS

4626

OpenAir™

Air damper actuators

GBB..1
GIB..1

Rotary version, AC 24 V / AC 230 V

Electronic motor driven actuators for three-position and modulating control, nominal torque 25 Nm (GBB) or 35 Nm (GIB), self-centering shaft adapter, mechanically adjustable span between 0...90°, pre-wired with 0.9 m long connection cables.
Type-specific variations with adjustable offset and span for the positioning signal, position indicator, feedback potentiometer and adjustable auxiliary switches for supplementary functions.

Remarks

This data sheet provides a brief overview of these actuators. Please refer to the Technical Basics in document Z4626en for a detailed description as well as information on safety, engineering notes, mounting and commissioning.

Use

- For damper areas up to 4 m^2 (GBB) or 6 m^2 (GIB), friction-dependent
- Suitable for modulating controllers (DC 0...10 V) or three-position controllers (e.g. for outside air dampers).
- For dampers having two actuators on the same damper shaft (tandem-mounted actuators or powerpack).
- It is recommended to switch off the power during **two-position control** when the actuator has reached the open or close position, in order to enhance life span and reduce power consumption.

Type summary

GBB../GIB..	131.1E	135.1E	136.1E	331.1E	335.1E	336.1E	161.1E	163.1E	164.1E	166.1E
Control type	Three-position control (see “Use”, above)						Modulating control			
Operating voltage AC 24 V	X	X	X				X	X	X	X
Operating voltage AC 230 V				X	X	X				
Positioning signal Y DC 0...10 V							X			X
DC 0...35 V with characteristic function Uo, ΔU								X	X	
Position indicator U = DC 0...10 V							X	X	X	X
Feedback potentiometer 1 kΩ		X			X					
Auxiliary switches (two)		X	X		X	X			X	X
Rotary direction switch							X	X	X	X
Powerpack (two actuators, tandem-mounted)	X	X	X	X	X	X	X	X	X	X

Functions

Type	GBB.3..1 / GIB.3..1	GBB/GIB16..1
Control type	Three-position control (see "Use")	Modulating control
Positioning signal with adjustable characteristic function		DC 0...35 V at Offset Uo = 0...5 V and Span ΔU = 2...30 V
Rotary direction	Clockwise or counter-clockwise direction depends...	
	…the type of control. With no power applied, the actuator remains in the respective position.	... the setting of the rotary direction switch clockwise / counter-clockwise
Position indication: Mechanical	Rotary angle position indication by using a position indicator.	
Position indication: Electrical	The feedback potentiometer can be connected to external voltage to indicate the position.	Position indicator: Output voltage U = DC 0...10 V is generated proportional to the rotary angle. U depends on the rotary direction of the switch setting.
Auxiliary switch	The switching points for auxiliary switches A and B can be set independent of each other in increments of 5° within 0° to 90°.	
Powerpack	Mounting two of the same actuator types on the same damper shaft results in a double torque (with accessories ASK73.1).	Mounting two of the same actuator types on the same damper shaft results in a double torque (with accessories ASK73.2).
Rotary angle limitation	The rotary angle of the shaft adapter can be limited mechanically at increments of 5°.	

Ordering

Note — Potentiometer **cannot be added in the field**. For this reason, order the type that includes the required options.

Delivery — Individual parts such as position indicator and other mounting materials for the actuator are **not mounted** on delivery.

Accessories, spare parts — Accessories to functionally extend the actuators are available, e.g., rotary/linear sets, auxiliary switches (1 or 2 switches) and weather protection cover; see data sheet **N4699**.

Technical data

⚠ AC 24 V supply (SELV/PELV)	Operating voltage / Frequency			AC 24 V ± 20 % / 50/60 Hz
	Power consumption	GBB/GIB13..1	Running	7 VA, 7 W
		GBB/GIB16..1	Running	8 VA, 8 W
		GBB/GIB16..1	Holding	1.1 W
⚠ AC 230 V supply	Operating voltage / Frequency			AC 230 V ± 10 % / 50/60 Hz
	Power consumption	GBB/GIB33..1		5 VA, 5 W
Function data	Nominal torque			25 Nm GBB
				35 Nm GIB
	Maximum torque (blocked)			50 Nm GBB
				75 Nm GIB
	Nominal rotary angle / Max. rotary angle			90° / max. 95° ± 2°
	Runtime for 90° rotary angle			150 s (50 Hz) / 125 s (60 Hz)
Positioning signal *for GBB/GIB16..1*	Input voltage Y (wires 8-2)			DC 0...10 V
	Max. permissible input voltage			DC 35 V
Characteristic functions *for GBB/GIB161.1, 166.1* *for GBB/GIB163.1, 164.1*	Input voltage Y (wires 8-2)			DC 0...35 V
	Non-adjustable characteristic function			DC 0...10 V
	Adjustable characteristic function		Offset Uo	DC 0...5 V
			Span ΔU	DC 2...30 V
Position indicator *for GBB/GIB16..1*	Output voltage U (wires 9-2)			DC 0...10 V
	Max. output current			DC ± 1 mA
Feedback potentiometer *for GBB/GIB135.1, 335.1*	Change of resistance (wires P1-P2)			0...1000 Ω
	Load			< 1 W
⚠ Auxiliary switches *for GBB/GIB..4.1/..5.1/..6.1*	Contact rating			6 A resistive, 2 A inductive
	Voltage (no mixed operation AC 24 V / AC 230 V)			AC 24...230 V
	Switching range for auxiliary switches			5°...90°
	Setting increments			5°
Connection cables	Cross-section			0.75 mm^2
	Standard length			0.9 m
Degree of protection of housing	Degree of protection as per EN 60 529 (note mounting instructions)			IP 54
Protection class	Insulation class			EN 60 730
	AC 24 V, feedback potentiometer			III
	AC 230 V, auxiliary switch			II
Environmental conditions	Operation / Transport			IEC 721-3-3 / IEC 721-3-2
	Temperature			–32...+55 °C / –32...+70 °C
	Humidity (non-condensing)			< 95% r. F. / < 95% r. F.
Norms and directives	Product safety: Automatic electrical controls for household and similar use			EN 60 730-2-14 (Type 1)
	Electromagnetic compatibility (Application)			For residential, commercial and industrial environments
			GBB..1:	GIB..1:
	EU Conformity (CE)		A5W00004366 [1]	A5W00004368 [1]
			GBB..1:	GIB..1:
	RCM Conformity		A5W00004367 [1]	A5W00004369 [1]
	Product environmental declaration [2]		CE1E4626en [1]	
Dimensions	Actuator W x H x D (see "Dimensions")			100 x 300 x 67.5 mm
	Damper shaft:	round		8...25.6 mm
		Square		6...18 mm
		Min. shaft length		20 mm
Weight	Without packaging			2 kg

[2] The product environmental declaration contains data on environmentally compatible product design and assessments (RoHS compliance, materials composition, packaging, environmental benefit, disposal).

Disposal

The device is considered an electronics device for disposal in terms of European Directive 2012/19/EU and may not be disposed of as domestic garbage.

- Dispose of the device through channels provided for this purpose.
- Comply with all local and currently applicable laws and regulations.

Internal diagrams

GBB/GIB13..1 / GBB/GIB33..1	GBB/GIB16..1
Three-position control	Modulating control DC 0...10 V / 0...35 V

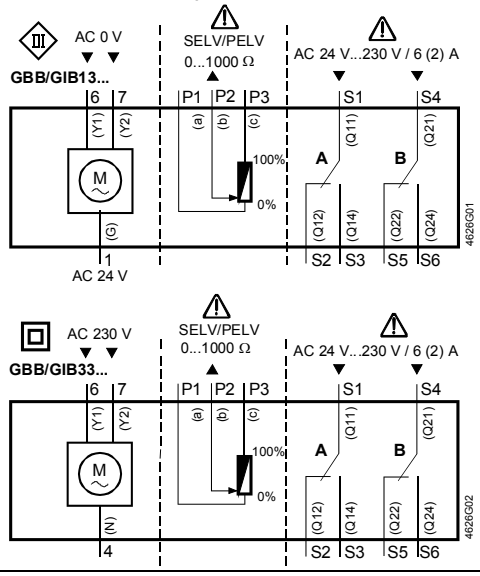

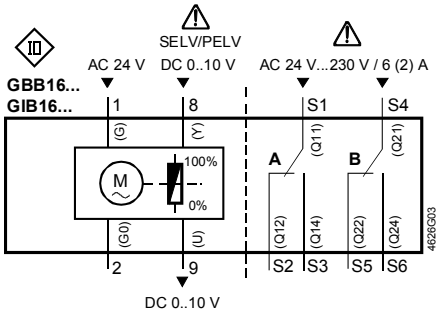

Cable labeling

Pin	Cable				Meaning
	Code	No.	Color	Abbreviation	
Actuators AC 24 V	G	1	red	RD	System potential AC 24 V
	G0	2	black	BK	System neutral
	Y1	6	purple	VT	Position signal AC 0 V, clockwise
	Y2	7	orange	OG	Position signal AC 0 V, counter-clockwise
	Y	8	grey	GY	Position signal DC 0...10 V, 0...35 V
	U	9	pink	PK	Position indication DC 0...10 V
Actuators AC 230V	N	4	blue	BU	Neutral conductor
	Y1	6	black	BK	Control signal AC 230 V, clockwise
	Y2	7	white	WH	Control signal AC 230 V, counter-clockwise
Auxiliary switch	Q11	S1	grey/red	GY RD	Switch A Input
	Q12	S2	grey/blue	GY BU	Switch A Normally closed contact
	Q14	S3	grey/pink	GY PK	Switch A Normally open contact
	Q21	S4	black/red	BK RD	Switch B Input
	Q22	S5	black /blue	BK BU	Switch B Normally closed contact
	Q24	S6	black /pink	BK PK	Switch B Normally open contact
Feedback potentiometer	a	P1	white/red	WH RD	Potentiometer 0...100 % (P1-P2)
	b	P2	white/blue	WH BU	Potentiometer pick-off
	c	P3	white/pink	WH PK	Potentiometer 100...0 % (P3-P2)

Dimensions

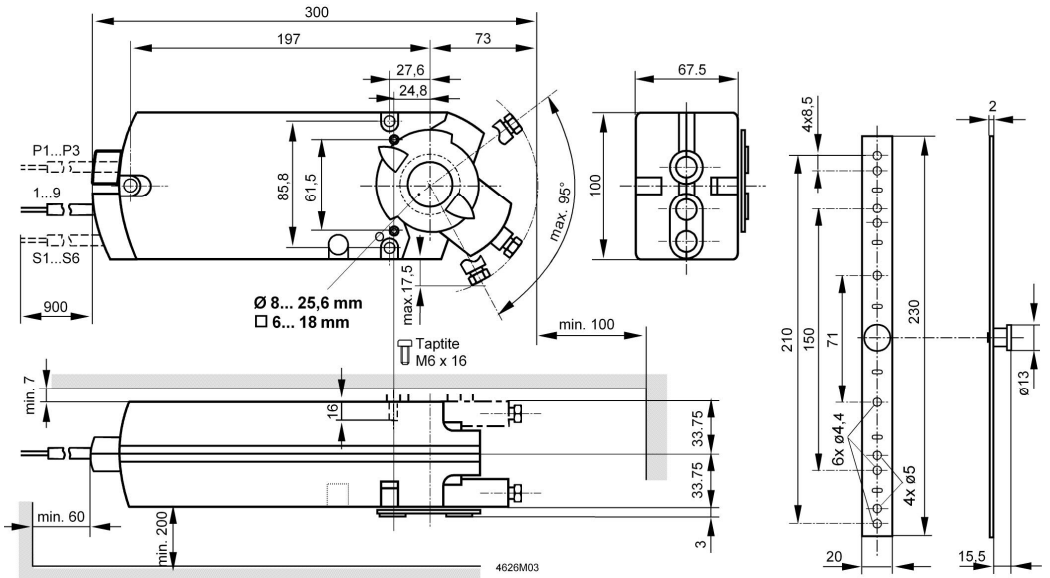

Dimensions in mm