ABB MEASUREMENT & ANALYTICS | DATA SHEET

TEIP11-PS

I/P signal converter for standard signals

Proven and reliable concept

Integral mount design
- Small dimensions, low weight

Sturdy construction and solid functionality
- Influence of shock and vibration < 1 % at 10 g

Variety of signal ranges
- Input e.g. 0 to 20 mA or 4 to 20 mA
- Output 0.2 to 1 bar (3 to 15 psi)

Complies with the following directives
- EMC directive 2014/30/EU
- EC directive for CE declaration of conformity

Wide temperature range
- From –40° (optional –55°) to 85 °C
(–40° [optional –67°] to 185 °F

Concept

The **TEIP11-PS** signal converter converts standard electrical signals, e.g. 4 to 20 mA to 0.2 to 1 bar (3 to 15 psi). It is therefore a connecting link between electrical/electronic and pneumatic systems. The signal conversion process is similar to the patented force balance method.
Special features of the **TEIP11-PS** signal converter are its relatively small dimensions and outstanding operational stability when subject to shock and vibration. The converter can be subjected to loads up to 10 g with less than 1% effect on function.
The housing units are available in a variety of models to meet your installation requirements. For potentially explosive conditions, units that offer intrinsically safe operation or pressure-resistant encapsulation are available with international approval certificates for use worldwide.
Various ranges can be supplied on the input side and the output side for signal conversion (see **Specification** on page 4).
The device requires only compressed air 1.4 bar (20 psi) for the power supply.

Designs

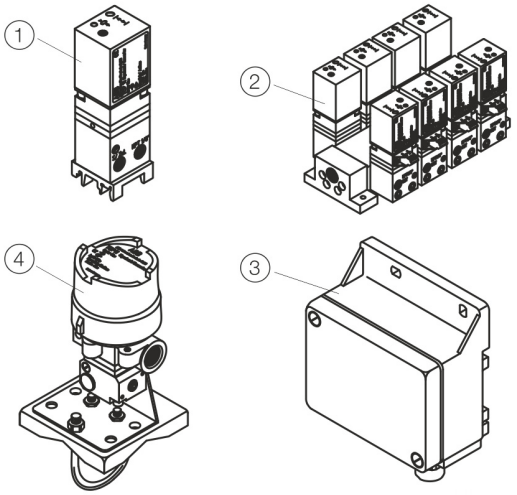

1. Control room housing for rail mounting
2. Control room housing unit for block mounting
3. Plastic field mount housing
4. Aluminum or stainless steel field mount housing

Figure 1: TEIP11-PS designs

Control room housing unit for rail mounting

The control room housing for rail mounting is the simplest and lowest priced version of the I/P signal converter.
A mounting base that is compatible with all commercially available EN rails is used for installation.
The housing unit with plastic cap has an IP 20 protection rating.

Control room housing unit for block mounting

The control room housing unit for block mounting enables you to install a number of converters in a small space. This design features central air supply via connection block and stop valves in the air connectors of the integrated signal converter.

A maximum of 4 signal converters can be fitted on the connection blocks required for block mounting. If necessary, 2 or 3 (or max. 4) connection blocks can be connected to each other to create block units of 4-8-12-16 signal converters. Stop valves allow you to mount or remove individual converters during operation.

… Designs

Field mount housing

The field mount housing is suited for installation on-site or in open areas. The housing can be made from plastic with IP rating IP 54, from aluminum with IP rating IP 65 and from stainless steel with IP rating IP 65. The housing is suited for wall mounting and for 2 in pipe mounting.

A specially designed signal converter in a plastic housing unit enables the use of combustible gas as a power supply instead of the standard compressed air.

Specification

Input (electric)

Signal range

0 to 20 mA or 4 to 20 mA
0 to 10 mA or 10 to 20 mA
4 to 12 mA or 12 to 20 mA
(additional ranges available upon request)

Input resistance

Ri = 260 Ω at 20 °C (68 °F), Tk + 0.4 %/K

Overpressure limit

30 mA (for Ex devices see **Ex relevant specifications** on page 8).

Capacitance / inductance

Negligible

Output (pneumatic)

Signal range

0.2 to 1 bar (3 to 15 psi)

Air capacity

≥ 5 kg/h = 4.1 Nm^3/h = 2.4 scfm

Load power in accordance with VDE / VDI 3520

≥ 0.95 kg/h = 0.9 Nm^3/h = 0.5 scfm

Power supply (pneumatic)

Instrument air

Free of oil, water, and dust acc. to DIN/ISO 8573-1
Pollution and oil content according to Class 3
Pressure dew point 10 K below operating temperature

Supply pressure

1.4 bar (20 psi)
2.5 bar (36 psi)*

Output signal

0.2 to 1 bar (3 to 15 psi)
0.4 to 2 bar (6 to 30 psi)*

* Valid for Option 509 only – increased input signal.

Air consumption

≤ 0.2 kg/h = 0.16 Nm^3/h = 0.1 scfm

Transmission data and contributing factors

Characteristic curve
Linear, direct, or reverse action

Characteristic curve deviation
≤ 0.5 %

Hysteresis
≤ 0.3 %

Dead band
≤ 0.1 %

Temperature
≤ 1 % / 10 K within –20 to 85 °C (–4 to 185 °F)
≤ 2 % / 10 K within –55 to –20 °C (–67 to –4 °F)

Power supply
≤ 0.3 % / 0.1 bar (1.5 psi) change in pressure

Mechanical vibration
≤ 1 % to 10 g and 20 to 80 Hz

Seismic vibration
Meets the requirements of DIN IEC 68-3-3 Class III for strong and strongest earthquakes.

Mounting orientation
Zero point≤ 0.4 % at 90° change of position

Step response
10 to 90 % and 90 to 10 % 0.6 s
5 to 15 % and 15 to 5 % 0.25 s
45 to 55 % and 55 to 45 % 0.2 s
85 to 95 % and 95 to 85 % 0.15 s

EMC
Meets the requirements of EMC Directive 2014/30/EU (increased interference immunity as per EN 50082-2 PR)

CE Marking
Complies with the EC directive for CE conformity

Operating conditions at installation site

Ambient temperature
Depending on the ordered model:
−40 to 85 °C (−40 to 185 °F)
–55 to 85 °C (–67 to 185 °F)
For Ex d:
−40 to 85 °C (−40 to 185 °F)

Mounting position
Any

Environmental capabilities

Climate class
GPF or FPF acc. to DIN 40040
Temperature:
–55 to 85 °C (–67 to 185 °F),
–45 to 85 °C (–49 to 185 °F)
Relative humidity for operation, storage, or transport:
75 % average, 95 % short-term,
no condensation

… Specification

Design for rail mounting

Material / IP rating
IP 20 aluminum housing unit, with plastic cover

Mounting
Rail mounting:
EN 50022 - 35 × 7.5
EN 50035 - G 32
EN 50045 - 15 × 5

Electrical connection
2-pole screw terminal for 2.5 mm^2 (14 AWG)

Pneumatic connection
⅛ NPT threaded hole for supply air and output

Weight
0.25 kg (0.55 lb)

Dimensions
Refer to **Dimensions** on page 10.

Design for block mounting

Material / IP rating
IP 20 aluminum housing unit, with plastic cover

Mounting
In block format with special connection block (accessory), max. 4 connection blocks each with 4 signal converters

Electrical connection
2-pole screw terminal for 2.5 mm^2 (14 AWG)

Pneumatic connection
⅜ NPT threaded hole for supply air
(main connection to connection block)
⅛ NPT threaded hole for output
(on each individual signal converter)

Mounting position
Any

Weight
0.3 kg (0.66 lb)

Dimensions
Refer to ‘Dimensions’.

Design for field mount housing (plastic)

Material / IP rating
Polyester housing unit, black, IP 54

Mounting
Wall or 2 in pipe mounting
(2 in pipe mounting for vertical pipes only)

Electrical connection
2-pole screw terminal for 2.5 mm^2 (14 AWG) in housing
PG 11 cable gland for cable entry

Pneumatic connection
⅛ NPT-threaded hole for supply air and output

Air outlet
For gas exhaust with 6 mm (0.24 in) cut or crimp connection

Mounting position
Any

Weight
1.0 kg (2.20 lb)

Dimensions
Refer to **Dimensions** on page 10.

Design for field housing unit (aluminum/stainless steel)

Material / IP rating

IP 65 aluminum or stainless steel housing unit

Surface

Aluminum housing,
painted with dual component coating,
lower section, black, RAL 9005,
screw-on cover, Pantone 420,
stainless steel housing unit,
electrolytically polished

Mounting

Wall or 2 in pipe mounting
With stainless steel mounting bracket (accessory)

Electrical connection

2-pole screw terminal for 2.5 mm^2 (14 AWG) in the housing, screw connection NPT ½ in for the cable entry.

For ATEX 'intrinsically safe':

Threaded hole NPT ½ in for the cable entry

For ATEX 'Ex d':

M20 × 1.5 threaded hole for cable entry at
FM/CSA
(Cable gland with Ex d approval available as an accessory on request)

Pneumatic connection

¼ in NPT threaded hole for supply air and output

Weight

0.62 kg (1.37 lb) with aluminum housing unit
1.20 kg (2.65 lb) for stainless steel housings.

Dimensions

Refer to **Dimensions** on page 10.

Accessories

'Ex d' cable gland

Brass, with M20 × 1.5 thread

Stainless steel mounting bracket for wall mounting or 2 in pipe mounting

For aluminum or stainless steel field housing unit

Material for block mounting

Connection block for 4 signal converters,
End panel with central supply air connection ⅜ NPT,
dummy panel

Ex relevant specifications

Flameproof (enclosure), ATEX ‘Ex d’

Marking	II 2G Ex d IIC T4/T5/T6 Gb
Type Examination Test Certificate	DMT 02 ATEX E 121 X
Type	DOC. 900771
Device class	II 2G
Standards	EN 60079-0: 2012 (General requirements) EN 60079-1: 2007 (Flameproof enclosure ‘d’)

System bus, computer interfaces	
Current	≤ 50 mA

Pneumatic data	
Supply pressure	1.4 bar (20 psi) / 2.5 bar (37 psi)*
Output signal	0.2 to 1 bar (3 to 15 psi) / 0.4 to 2 bar (6 to 30 psi) *

* Valid for Option 509 only – increased input signal.

Thermal data	T4: –40 °C < Tamb < 85 °C
	T5: –40 °C < Tamb < 70 °C
	T6: –40 °C < Tamb < 55 °C

Special conditions

The I/P signal converter is suited for use in an ambient temperature range of –40 °C to maximum 85 °C.
If the I/P signal converter is used at an ambient temperature above 60 °C or below –20 °C, use cable entries and cables suited to an operating temperature that corresponds to the maximum ambient temperature plus 10 K or that corresponds to the minimum ambient temperature.

Versions with an intrinsically safe control head may no longer be operated as intrinsically safe if they have been previously operated with the ‘flameproof (enclosure)’ type of protection with a non-intrinsically safe power supply.

Operation as intrinsically safe equipment

Marking	II 2G Ex ia IIC T6 resp. T4 Gb
Type Examination Test Certificate	TÜV 99 ATEX 1487 X
Type	TEIP11, Doc. 901068-SMDxxxx TEIP11-PS, Doc. 901068-SMDxxxx TEIP11-PS, Doc. 901069-SMDxxxx
Device class	II 2G
Standards	EN 60079-0:2009 EN 60079-11:2012

Temperature classes for the following versions:
TEIP11 Doc. 901068-SMD and TEIP11-PS Doc. 901068-SMD and TEIP11-PS Doc. 901069-SMD

Temperature class	**Input current**	**Ambient temperature range**
T4	120 mA	–55 to 60 °C
T4	100 mA	–55 to 85 °C
T6	60 mA	–55 to 40 °C

TEIP11 Doc. 901068 and TEIP11-PS Doc. 901068 and TEIP11-PS Doc. 901069

Temperature class	**Input current**	**Ambient temperature range**
T6	50 mA	–55 to 60 °C
T6	60 mA	–55 to 55 °C
T5	60 mA	–55 to 70 °C
T4	60 mA	–55 to 85 °C
T5	100 mA	–55 to 55 °C
T4	100 mA	–55 to 85 °C
T5	120 mA	–55 to 45 °C
T4	120 mA	–55 to 80 °C
T4	150 mA	–55 to 70 °C

Ex limit values

L_i	U_i	P_i
50 mA	42.5 V	2.125 W
60 mA	38.8 V	2.328 W
100 mA	30 V	3.0 W
120 mA	28 V	3.36 W
150 mA	25.5 V	3.825 W

Special conditions
The I/P signal converter TEIP11-PS Doc. 901068 or TEIP11-PS Doc. 901069 must be set up outdoors as a pneumatic power supply when used with combustible gases.

The supplied gas must be kept sufficiently free of air and oxygen to prevent a potentially explosive atmosphere from forming.
The gas must always be routed to the outside.

FM / CSA

Intrinsically safe FM
FM 'intrinsically safe' (not for metal field housing units)
I.S.: CL I/Div 1/Grp A B C D

FM 'intrinsically safe' (only for metal field housing units)
I.S.: CL I-II-II/Div 1/Grp A B C D E F G
S.: CL II/Div 2/Grp G
S.: CL III/Div 2

Non-incendive FM
N.I.: CL I/Div 2/Grp A B C D (not for metal field housing units)
N.I.: CL I/Div 2/Grp A B C (only for metal field housing units)

Intrinsically safe CSA
CSA 'intrinsically safe' (not for metal field housing units)
I.S.: CL I/Div 1/Grp A B C D
CL I / Div 2 / Grp A B C D

CSA 'intrinsically safe' (only for metal field housing units)
I.S.: CL I/Div 1/Grp A B C D
CL II / Div 1 / Grp E F G
CL III
CL I / Div 2 / Grp A B C D
CL II / Div 2 / Grp E F G

Non-incendive CSA
FM 'explosion proof' (only for metal field housing units)
X.P.: CL I/Div 1/Grp B C D
D.I.P.: CL II III/Div 2/Grp E F G

CSA 'explosion proof' (only for metal field housing units)
X.P.: CL I/Div 1/Grp B C D

Dimensions

Design for control room housing unit for rail mounting

Dimensions in mm (in)

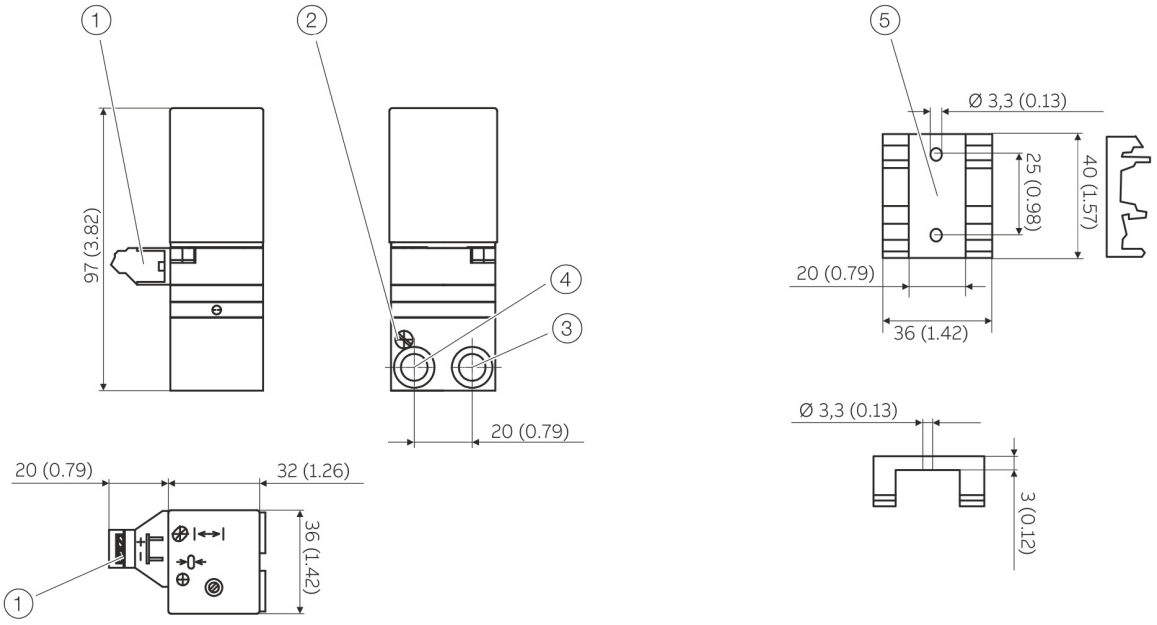

1. Electrical connections
2. Filter
3. Output
4. Supply air
5. Mounting bracket for DIN rail mounting

Figure 2: Dimensions of control room housing design for rail mounting

Design for control room housing unit for block mounting

Dimensions in mm (in)

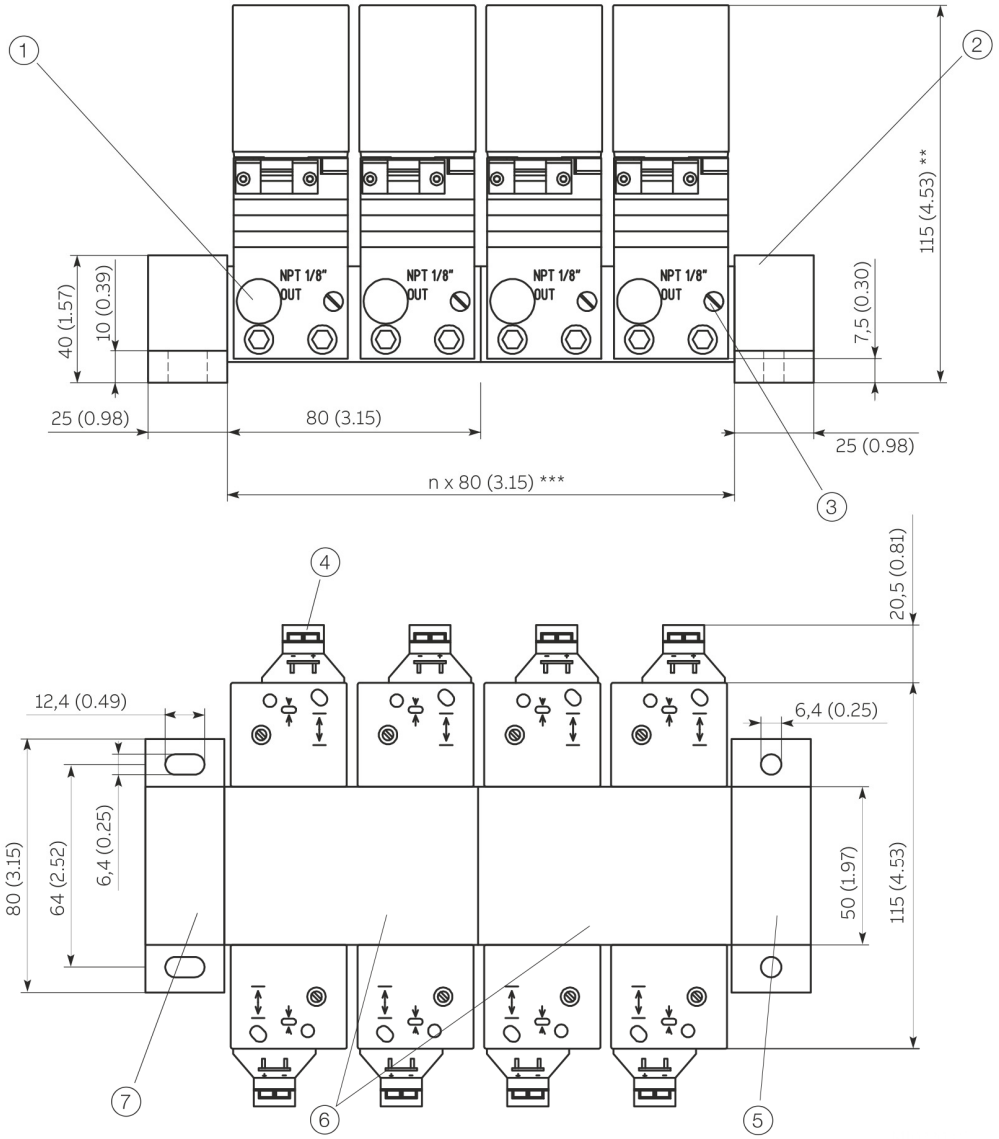

1. Output
2. Supply air
3. Filter
4. Electrical connections
5. End panel with central supply air connection
6. Connection blocks
7. End panels, blank

Figure 3: Dimensions of control room housing design for block mounting

* Version 0.2 to 1 bar (2.90 to 14.50 psi)

** Version 0.4 to 1 bar (5.80 to 14.50 psi)

*** Length 80 mm (3.15 in) per connection block

… Dimensions

Design for plastic field housing unit

Dimensions in mm (in)

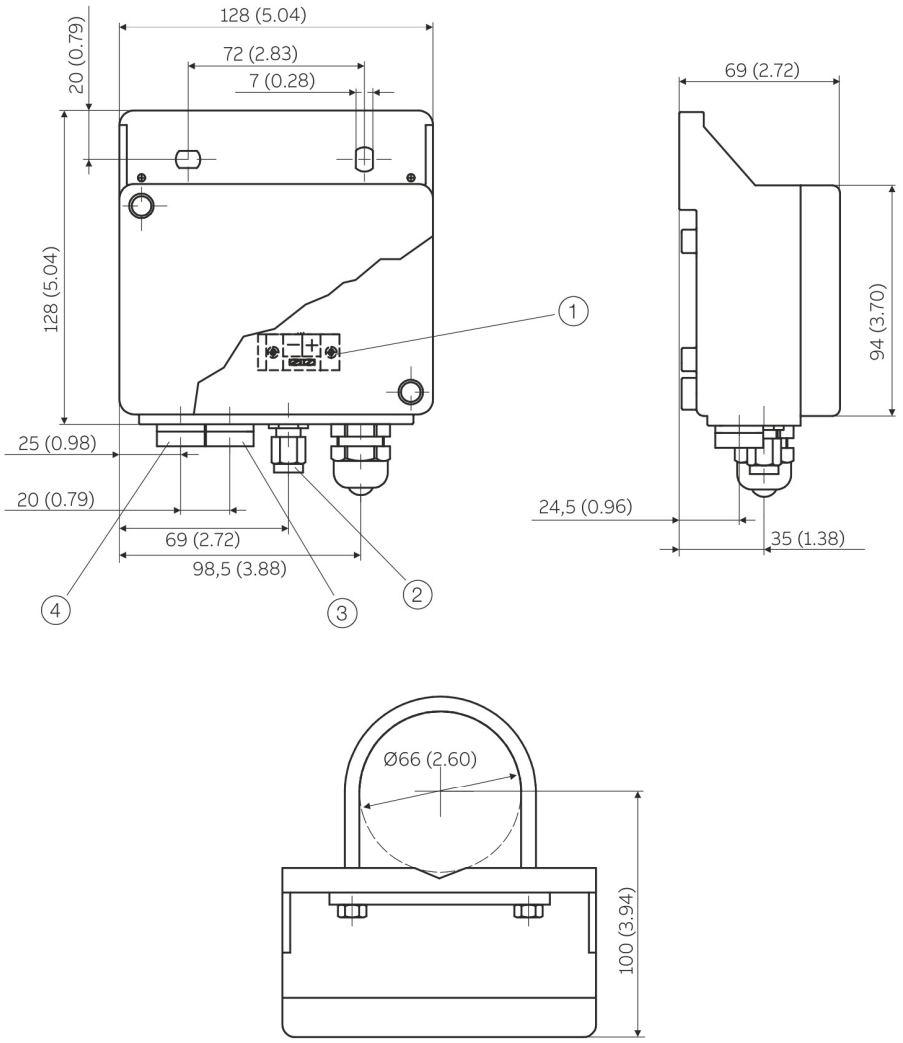

1. Electrical connections
2. Connection only with version for operation with flammable gas for diverting the escaping gas / 6 mm (0.24 in) screw terminal connection
3. Supply air
4. Output
5. Cable gland

Figure 4: Dimensions of plastic field mount housing design

Design for aluminum or stainless steel field mount housing

Dimensions in mm (in)

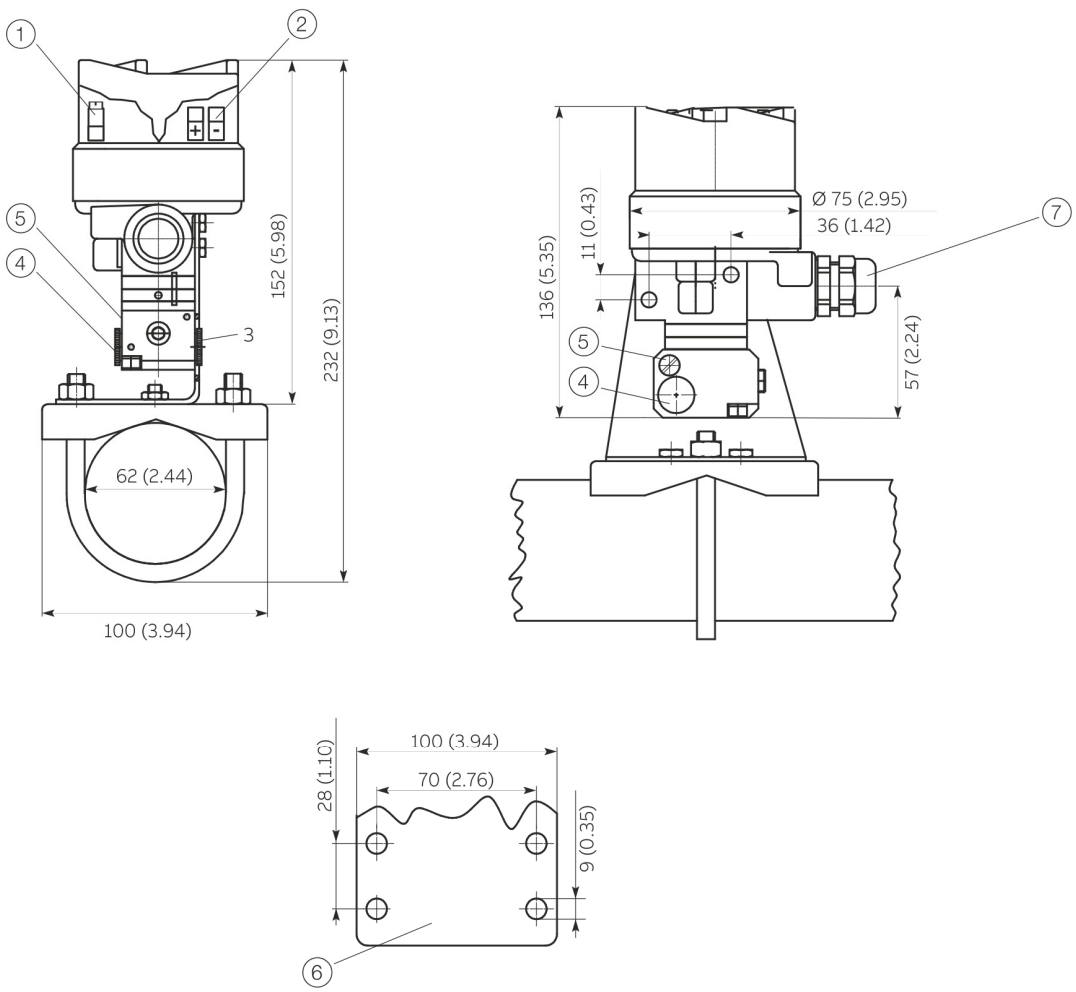

1. Ground terminal
2. Electrical connections
3. Output
4. Supply air
5. Filter
6. Clamp sheet for wall mounting
7. Cable gland

Figure 5: Dimensions of aluminum or stainless steel field mount housing design

Clean Rooms | Pharma | Hospital | HVAC | BulkDrugs | Chemicals | Heavy Machinery
Hydraulics & Vacuum Industry | Green House | Server Room | Confined Space | Cold Storage

Instrukart Holdings
India Toll Free : 1800-121-0506 | Ph : +91 (40)40262020
Mob +91 7331110506 | Email : info@instrukart.com
#18,Street-1A, Czech Colony, Sanath Nagar, Hyderabad -500018, INDIA.

INSTRUKART
YOUR WORLDWIDE INSTRUMENT PARTNER